Cf and Cv Values for Kimray Valves and Regulators

Pilot Operated Regulators — Catalog Section A

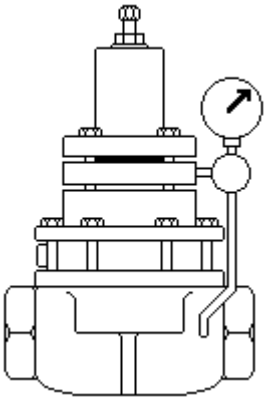

Type	Size	Cf	Cv
1"	1.00"	0.74	13.2
1" Reduced	.50	0.75	5.0
2"	2.00"	0.75	52.0
2" Removable	2.00"	0.84	47.0
2" Reduced	1.25"	0.75	21.0
3"	3.00"	0.75	117.0
4"	4.00"	0.75	210.0
6"	6.00"	0.75	480.0

Note: The Cv for the following regulators must be adjusted according to the table on the right.
All Back Pressure
Non Venting Pressure Reducing

Pressure Drop	% of Rated Cv
0 - 3 psi	< 50%
3 - 6 psi	80%
6 - 12 psi	90%
> 12 psi	100%

Mechanical Oil Valves — Catalog Section C2

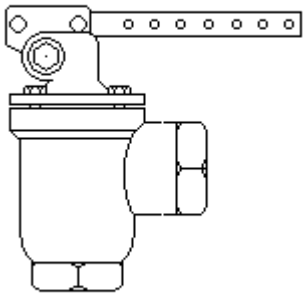

Type	Inner Valve Size	Cf	Cv
2"	1.50"	0.79	23.3
3"	2.25"	0.79	43.8
4"	3.00"	0.79	70.1
6"	4.88"	0.79	277.0

Cf and Cv Values for Kimray Valves and Regulators

1” High Pressure Motor Valves — Catalog Section E1

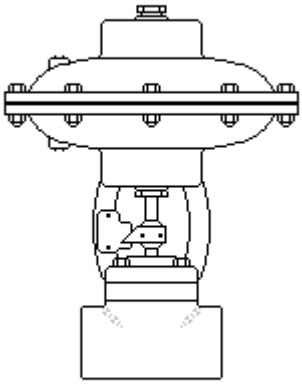

Inner Valve	Cf	Cv
1/8 Carbide	0.73	0.45
3/16 Carbide	0.74	1.00
1/4 Carbide	0.68	1.93
3/8 Carbide	0.74	3.86
1/2 Carbide	0.90	5.70
1/8 Nominal	0.58	1.06
3/16 Nominal	0.59	1.51
1/4 Nominal	0.78	2.17
3/8 Nominal	0.91	3.22
1/2 Nominal	0.94	5.72
1/8 Equal %age	0.73	0.34
1/4 Equal %age	0.66	1.99
1/2 Equal %age	0.78	6.49
15/16 Soft Seat	0.65	12.00

1” Metering Valve — Catalog Section E1

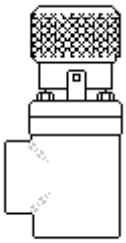

Inner Valve	Cf	Cv
1/4 Equal %age	0.66	1.99
1/2 Equal %age	0.78	6.49
1/4 Linear	0.65	1.80
1/2 Linear	0.83	6.08

1” Non-Freeze Dump Valve — Catalog Section E1

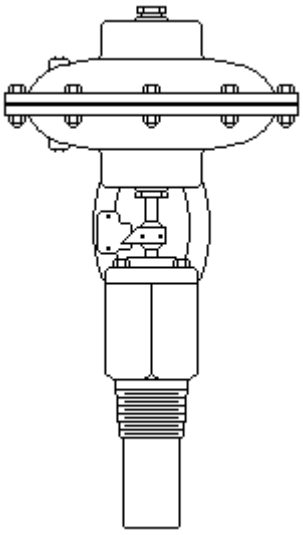

Inner Valve	Cf	Cv
1/4 Carbide	0.76	1.85
3/8 Carbide	0.71	4.15
1/8 Nominal	0.74	0.43
3/16 Nominal	0.70	1.07
1/4 Nominal	0.72	2.11
3/8 Nominal	0.74	3.96
1/2 Nominal	0.77	6.34

Cf and Cv Values for Kimray Valves and Regulators

2” High Pressure Motor Valves — Catalog Section E1

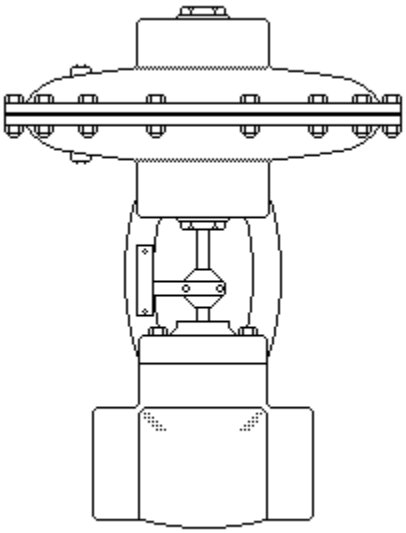

Inner Valve	Cf	Cv
1/4 Carbide	0.65	2.10
3/8 Carbide	0.76	4.07
1/2 Carbide	0.80	7.20
3/4 Carbide	0.78	13.11
1 Carbide	0.70	19.90
1/4 Nominal	0.55	2.96
3/8 Nominal	0.77	4.04
1/2 Nominal	0.78	7.20
3/4 Nominal	0.80	12.20
1 Nominal	0.77	21.25
3/4 65 PCN	0.62	9.42
1/4 Equal %age	0.65	2.12
7/16 Equal %age	0.60	5.44
5/8 Equal %age	0.58	10.76
7/8 Equal %age	0.66	17.40

2” Metering Valve — Catalog Section E1

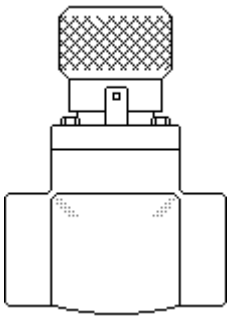

Inner Valve	Cf	Cv
7/16 Equal %age	0.60	5.44
5/8 Equal %age	0.58	10.76
7/8 Equal %age	0.66	17.40

Balanced High Pressure Motor Valve — Catalog Section E1

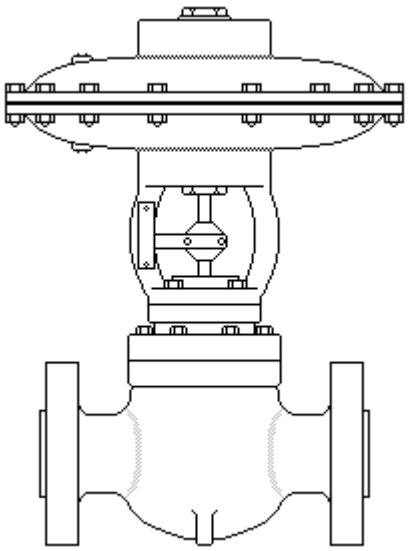

Type	Inner Valve Size	Cf	Cv
2"	2"	0.76	57.0
2"	1 1/2"	0.75	28.6
3"	3"	0.76	107.0
3”	2”	0.75	52.6
4”	4 3/8”	0.75	222.0
4”	3”	0.75	115.0
6”	6 3/4”	0.75	431.0
6”	4 3/8”	0.75	222.0
8”	Equal %age	0.75	810.0
8”	Modified %	0.75	630.0
8”	Reduced (6”)	0.75	453.0
10”	Equal %age	0.75	1091.0
10”	Modified %	0.75	855.0
10”	Reduced (8”)	0.75	655.0

Cf and Cv Values for Kimray Valves and Regulators

Low Pressure Motor Valves — Catalog Section E2

Pressure Closing

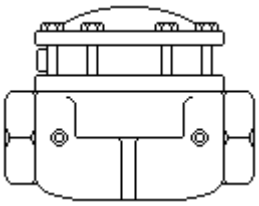

Type	Size	Cf	Cv
1"	1.00"	0.74	13.2
1" Reduced	.50	0.86	5.6
1" Reduced	.75	0.75	8.7
2"	2.00"	0.75	52.0
2" Removable	2.00"	0.84	47.0
2" Reduced	1.25"	0.84	24.0
3"	3.00"	0.75	117.0
3" Reduced	1.62"	0.82	34.2
4"	4.00"	0.75	210.0
4" Reduced	2.00"	0.80	55.0
6"	6.00"	0.75	480.0
6" Reduced	3.00"	0.80	120.0

Note: Unless a diaphragm assist spring is used the Cv should be adjusted for the following conditions

Pressure Drop	% of Rated Cv
0 - 3 psi	< 50%
3 - 6 psi	80%
6 - 12 psi	90%
> 12 psi	100%

Pressure Opening

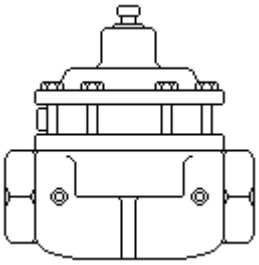

Type	Size	Cf	Cv
1"	1.00"	0.74	13.2
1" Reduced	.50"	0.86	5.6
1" Reduced	.75"	0.75	8.7
2"	2.00"	0.75	52.0
2" Removable	2.00"	0.84	47.0
2" Reduced	1.25"	0.84	24.0
3"	3.00"	0.75	117.0
3" Reduced	1.62"	0.82	34.0
4"	4.00"	0.75	210.0
4" Reduced	2.00"	0.80	55.0
6"	6.00"	0.75	480.0
6" Reduced	3.00"	0.80	120.0

Balanced Low Pressure Motor Valve — Catalog Section E3

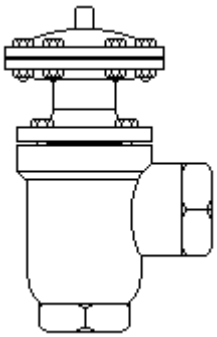

On/Off Liquid Dump

Type	Inner Valve Size	Cf	Cv
2"	1.50"	0.79	23.3
3"	2.25"	0.79	43.8
4"	3.00"	0.79	70.1
6"	4.88"	0.79	277.0

Piston Balanced Throttling

2"	2.00"	0.75	47.0

3"	3.00"	0.75	89.0
4"	4.00"	0.75	160.0

Cf and Cv Values for Kimray Valves and Regulators

Low Pressure

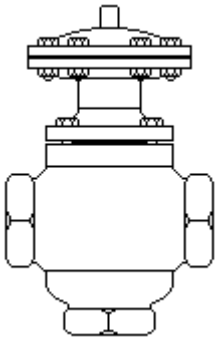

Type	Cf	Cv Upper Port	Cv Lower Port
2"	0.79	36.4	32.0
3"	0.79	81.0	72.0

High Pressure

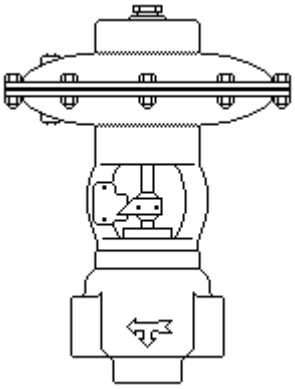

Type	Cf	Cv Upper Port	Cv Lower Port
1"	0.70	8.3	13.8
2"	0.70	27.7	38.1

2” High Pressure Splitter Valve

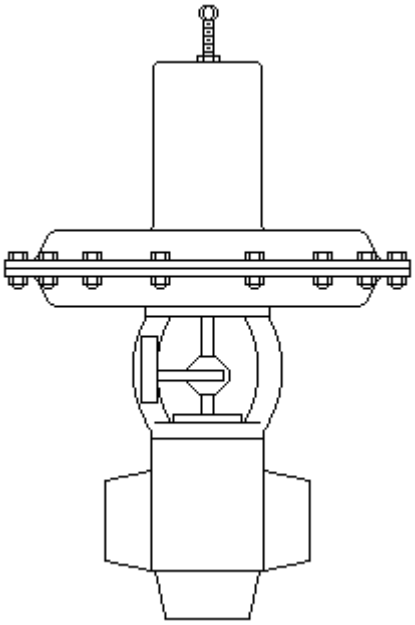

Type	Cf	Cv Upper Port	Cv Lower Port
2"	0.70	7.5	10.5

Cf and Cv Values for Kimray Valves and Regulators

Treater Valves — Catalog Section D

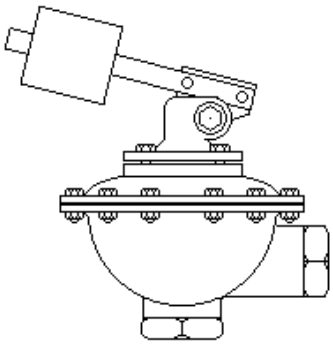

Size	Cf	Cv
2”	.75	36.5
3”	.75	93.3
4”	.75	173.5
6”	.75	371.9

Pilots — Catalog Section Y

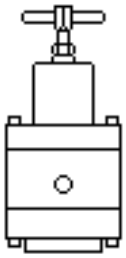

	Cf	Cv
Supply Gas Regulator	0.7	0.1