HIGH PRESSURE MOTOR VALVES

2 HPMV

FEATURES:
All steel topworks
O Ring sealed seat
Valve travel indicator
Teflon packed stuffing box
6000 psig WP

TOPWORKS:
Diaphragm effective area: 65 square inches

Adjustable spring load with high upstream pressure the upward forces on the stem can prevent the valve from closing. Additional load on the adjustable spring will overcome these forces while still allowing the valve to be fully operated with no more than 30 psig diaphragm pressure.

STEM TRAVEL:
3/4" maximum

ACTUATOR WORKING PRESSURE:
10-30 psig normal (see spring ranges)
45 psig maximum

INNER VALVE SIZES:
Standard & Carbide: 1/4",3/8", 1/2", 3/4", & 1"
Equal Percentage: 1/4",3/8", 1/2", 3/4", & 1"
Inner valves are offered in a wide selection of materials.
Specify when ordering.

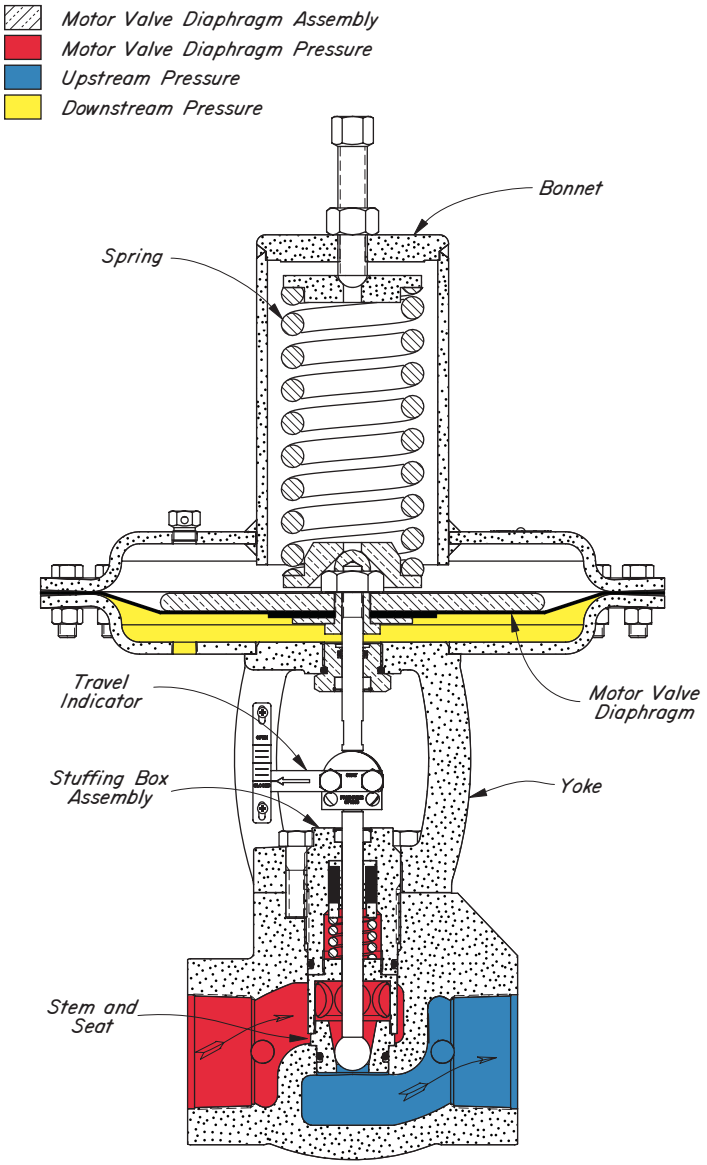

HIGH PRESSURE MOTOR VALVES

2 HPMV
STEEL

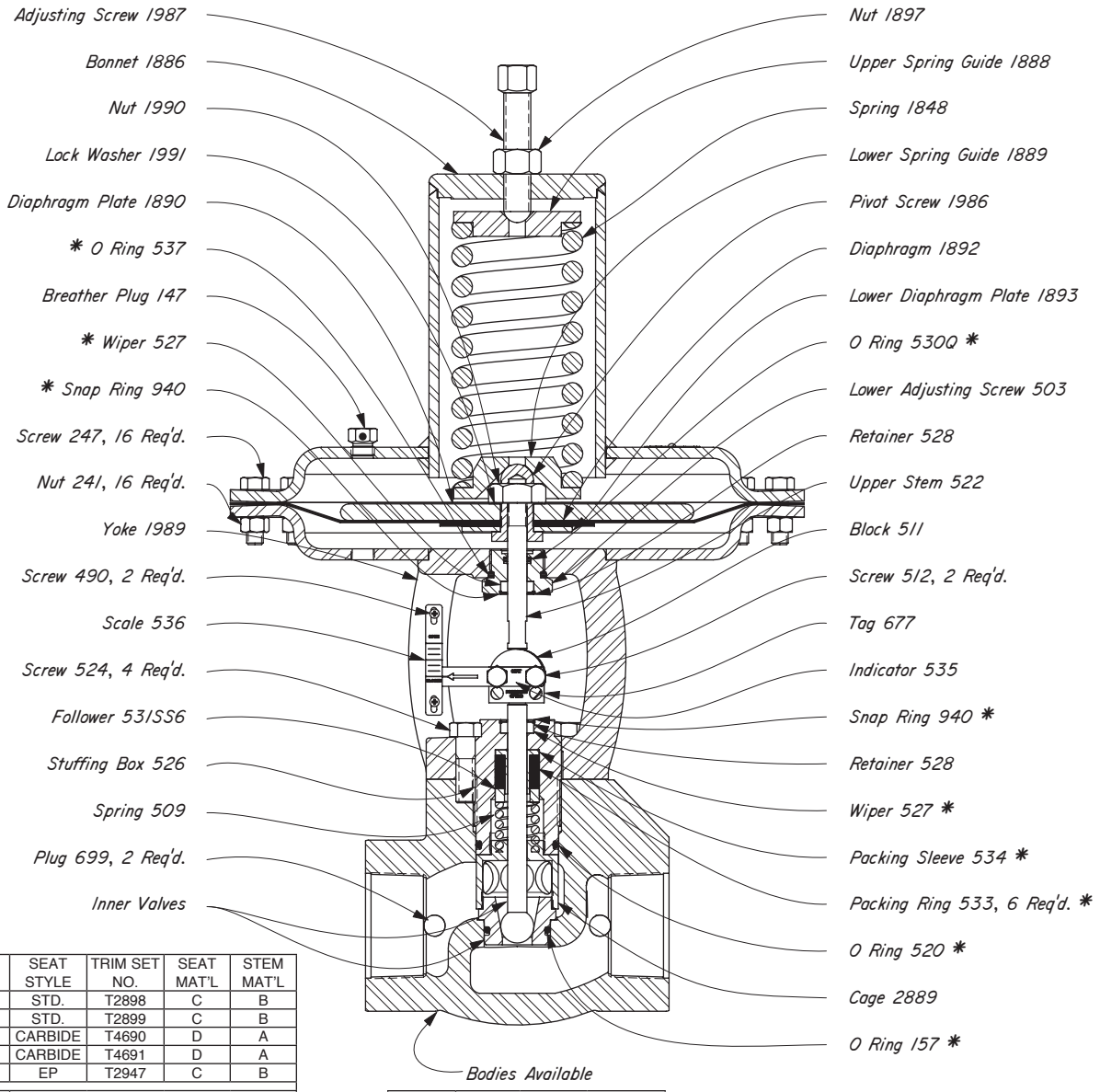

SEAT SIZE	SEAT STYLE	TRIM SET NO.	SEAT MAT'L	STEM MAT'L
3/4"	STD.	T2898	C	B
1"	STD.	T2899	C	B
3/4"	CARBIDE	T4690	D	A
1"	CARBIDE	T4691	D	A
7/8"	EP	T2947	C	B

A	Carbide ball / 303SS stem
B	Hardened high chrome alloy ball / 303SS stem
C	D-2 tool steel
D	Carbide insert in D-2 tool steel

BODY TYPE	SCREWED		
	SIZE	BODY	W.P.
THRU	2"	4083	6000 psig
ANGLE	2"	4355	6000 psig

THRU VALVES AVAILABLE:

CAT. NO.	INNER VALVE	VALVE	MAX W.P.	KIT
EHAK	3/4"	2600 SMT PO W/65 TWKS	6000	RFE
EHAN	1"	2600 SMT PO W/65 TWKS	6000	RFE
EHAK-CB	3/4"	2600 SMT PO W/65 TWKS	6000	RFE
EHAN-CB	1"	2600 SMT PO W/65 TWKS	6000	RFE
EHAL	7/8"	2600 SMT PO W/65 TWKS	6000	RFE

ANGLE VALVES AVAILABLE:

CAT. NO.	INNER VALVE	VALVE	MAX W.P.	KIT
EHAS	3/4"	2600 SMA PO W/65 TWKS	6000	RFE
EHAU	1"	2600 SMA PO W/65 TWKS	6000	RFE
EHAU-CB	1"	2600 SMA PO W/65 TWKS	6000	RFE